TEST REPORT

No.:ZJWT232800892

Sample Description: Shoe Bench

Model/Specification/Grade: 837-429V80WT

Applicant: ODA Home Furniture (Fuzhou) Co., LTD

Applicant Address: No. 132 North Guoyou Road, Donghu Town, Lianjiang County, Fuzhou City, ODA Home Furniture

Date of Receipt: 2023-11-11

Test Period: 2023-11-11 to 2023-11-21

Test Location: Science and Innovation Park, 398 Mahuan Road, Binhai New District, Shaoxing City, Zhejiang

SMQ Group (ZheJiang) Quality Technology Service Co., Ltd. (Stamp)

Approved by: Peng Shangwu

Issue Date: 2023-11-23

Signature: Peng Shangwu

重 要 声 明

Importants statement

1. 本公司保证检验检测的科学性、公正性和准确性，对检验检测的数据负责，并对委托单位所提供的样品和技术资料保密。
The company is committed to assuring the scientificness, impartiality and accuracy of all tests carried out, responsibility for test data gained, and keeping confidential of all test samples and technical documents provided.

2. 抽样按照本公司程序文件《抽样程序》和相应产品的检验检测细则的规定执行。
The sampling should be carried out according to the "sampling procedure" defined in the Procedure Document and relevant testing specifications.

3. 报告无主检、审核、批准人签字，或涂改，或未盖本公司报告专用章及骑缝章无效。未经本公司许可，不得部分复印、摘用或篡改本报告内容。复印报告未重新加盖本公司报告专用章无效。
Any report/certificate having not been signed by relevant responsible engineer, reviewer or authorized approver, or having been altered without authorization, or without both the Dedicated Report/Certificate Seal and its across-page seal is deemed to be invalid. Copying or excerpting portion of, or altering the content of the report/certificate is not permitted without the written authorization of the company. Any copy of certificates/reports without the Dedicated Report/Certificate Seal is deemed to be invalid.

4. 送样委托检验检测结果仅对来样有效：委托检验检测的样品信息及委托方信息均由委托方提供，本公司不对其真实性及准确性负责。
The test results presented in the report apply only to the tested sample. The product information and the applicant information are provided by the customer and the company assumes no responsibility for their validity and accuracy.

5. 未经公司同意，样品委托人请勿使用检验检测结果进行不当宣传。
Any use of the company test result for advertisement of the tested material or product must be approved in writing by the company.

6. 无认可认定标志的报告，仅作科研、教学或内部质量控制等用途之用。
Reports without accreditation marks are only used for scientific research, teaching or internal quality control purposes.

7. 委托方对报告有异议的，应于报告发出之日起十五日内向本公司提出。政府行政管理部门下达的监督检验任务，受检方对报告有异议的，应按政府行政管理部门文件规定及国家相关法律、法规处理。
objection to report/certificate issued by the company should be submitted to the company within 15 days after the issuance of the test. The mandatory inspection assigned by government administrative departments shall be carried out in accordance with the documents and regulations of the government administrative department and relevant national laws and regulations if inspected parties raise any objection to the inspection.

8. 报告更改后，发出的电子版报告、报告的扫描件及传真件若无法追回，则委托方有义务将更改后的报告提供给使用原报告的相关方。
The company is not responsible for recalling the electronic version of the original report/certificate when any revision is made to them. The applicant assumes the responsibility of providing the revised version to any interested party who uses them.

9. 只申领电子报告时，相关内容和效力以电子报告为准；电子报告和纸质报告同时申领时，电子报告仅作为纸质报告的副本，相关内容和效力以同编号纸质报告为准。
The relevant content and effectiveness is subject to the electronic version of the original report which was only applie d for. When an electronic report and a paper report are applied for at the same time, the electronic report is only a co py of the paper report, and the relevant content and effectiveness is subject to the paper report.

投诉及报告/证书真伪查询电话
Complaint hotline: 0575-81279666

TEST REPORT

Sample Information:

Sample Description: Shoe Bench
Trade Mark: ----------
Model/Specification/Grade: 837-429V80WT
Serial/Batch No. of Sample: ----------
Manufactured Date: ----------
Manufacturer: ODA Home Furniture (Fuzhou) Co., LTD
Manufacturer Address: ----------
Sample Quantity: 1pc
Sample Description before Testing: Normal

Client Information:

Applicant: ODA Home Furniture (Fuzhou) Co., LTD
Applicant Address: No. 132 North Guoyou Road, Donghu Town, Lianjiang County, Fuzhou City, ODA Home Furniture
Applicant Telephone: ----------
Applicant Post Code: ----------

Test Information:

Date of Receipt: 2023-11-11
Applicant No.: 7000707
Enviroment Condition: （15～25）℃ （50～70）%RH
Sampling Method: Delivered by Applicant
Judgment Basis: EN 12520:2015, Furniture - Strength, durability and safety - Requirements for domestic seating
Test Standard: 1.EN 1022:2018, Domestic furniture - Seating - Determination of stability
2.EN 1728:2012, Furniture - Seating -Test methods for the determination of strength and durability

Test Conclusion:

The tested sample COMPLIED with the above standard: EN 12520:2015.

Tested by: Xu Hanzhang Xu Hanzhang Checked by: Li Li Li Li

TEST REPORT

Test Result:
1. EN 12520:2015, Furniture – Strength, durability and safety – Requirements for domestic seating (Reference test methods- EN 1728:2012)

CLAUSE	REQUIREMENT	Result	REMARKS (nominal and actual values)
5.1	General requirements	P	/
5.2	Shear and squeeze points	P	/
5.3	Stability	P	See EN 1022:2018 result.
EN 1728:2012 clause 6.4	Seat static load and back static load test	P	Seat Force:1,300N Cycles: 10
EN 1728:2012 clause 6.5	Seat Front Edge Static Load test	P	Seat Force:1,300N Cycles: 10
EN 1728:2012 clause 6.8	Foot rest static load test	N/A	/
EN 1728:2012 clause 6.10	Arm rest sideways static load test	N/A	/
EN 1728:2012 clause 6.11	Arm rest downwards static load test	N/A	/
EN 1728:2012 clause 6.17	Combined seat and back durability test	P	Seat Force:1,000N Cycles:25,000
EN 1728:2012 clause 6.18	Seat front edge durability test	P	Seat Force:800N Cycles:20,000
EN 1728:2012 clause 6.20	Arm rest durability test	N/A	/
EN 1728:2012 clause 6.15	Leg forward static load test	P	Seat Force :1,000N Horizontal force: 400 N(Max) Cycles:10
EN 1728:2012 clause 6.16	Leg sideways static load test	P	Seat Force :1,000N Horizontal force: 300 N(Max) Cycles:10
EN 1728:2012 clause 6.24	Seat impact test	P	Drop height: 180mm Cycles:10
EN 1728:2012 clause 6.28	Backward fall test	N/A	/
EN 1728:2012 clause 6.25	Back impact test	N/A	/
6	Information for use	P	/

2. EN 12520:2015, Furniture – Strength, durability and safety – Requirements for domestic seating (Reference test methods- EN 1022:2018)

CLAUSE	REQUIREMENT	Result	REMARKS (nominal and actual values)
7.3.1	Forwards overturning	P	No overturning was found during the test.
7.3.2	Forwards overturning for seating with footrest	N/A	/
7.3.3	Corner stability test	P	No overturning was found during the test.
7.3.4	Sideways overturning, all seating without arm rests	P	No overturning was found during the test.
7.3.5.2	Sideways overturning, Seating with arm rests	N/A	/
7.3.5.3	Sideways overturning, Seating with raised side edges	N/A	/
7.3.6	Rearwards overturning all seating with backrests	N/A	/
7.4	Additional test procedures for seating with reclining back rests		
7.4.2	Tilting seating	N/A	/
7.4.3	Reclining seating with leg rest	N/A	/
7.4.4	Reclining seating without leg rest	N/A	/
7.4.5	Rearwards stability test for rocking chairs	N/A	/

******** End of Page ********

6 Information for use	Rating	Note
Information for use shall be available in the language of the country in which it will be delivered to the end user. It shall contain at least the following details:	P	/
assembly instructions, where applicable;	P	/
instructions for the care and maintenance of the seating;	P	/
if the seating is fitted with seat height adjustments with energy accumulators, an additional note is required pointing out that only trained personnel may replace or repair seat height adjustment components with energy accumulators.	N/A	/

Legend:

P = PASS, the sample MEETS the standard requirement.

F = FAIL, the sample DOES NOT MEET the standard requirement.

N/A = NON APPLICABILE, the requirement/test IS NOT APPLICABLE to the sample.

N/R = NOT REQUESTED, On Customer request the test is NOT PERFORMED.

NP = General note (see details).

ND = NOT DECLARED.

// = The rating of test CANNOT BE EXPRESSED, see details in test report

******** End of Page ********

Received instruction:

Received instruction（view 1）	Received instruction（view 2）
	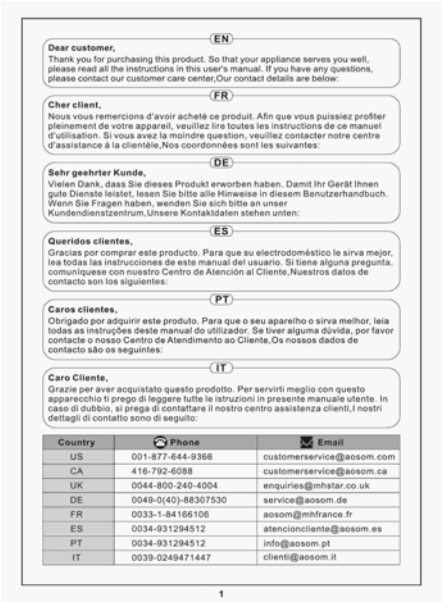
Received instruction（view 3）	Received instruction（view 4）
	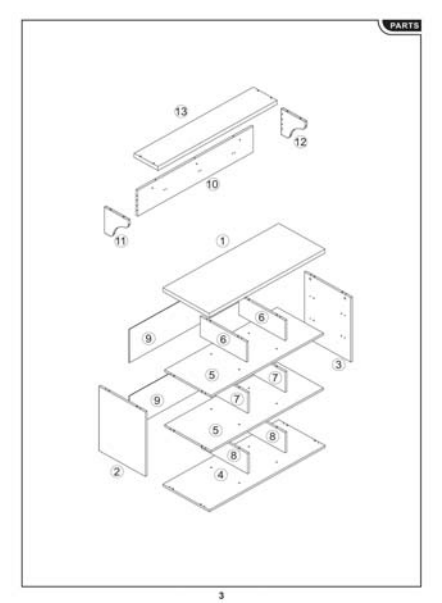

Received instruction（view 5）	Received instruction（view 6）
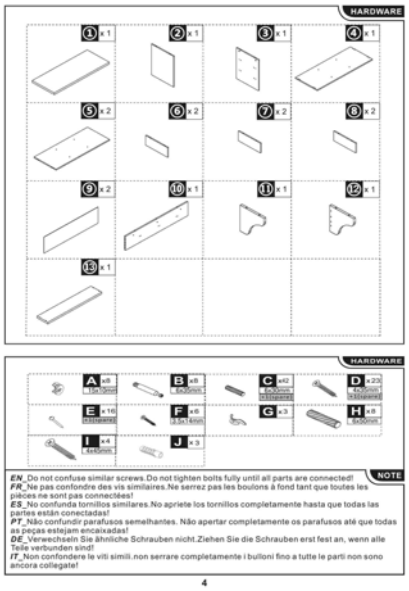	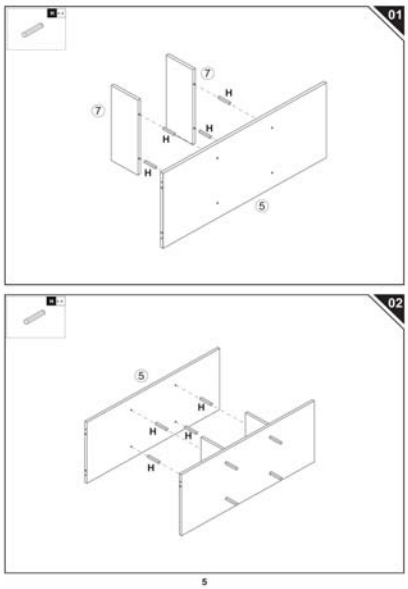
Received instruction（view 7）	Received instruction（view 8）
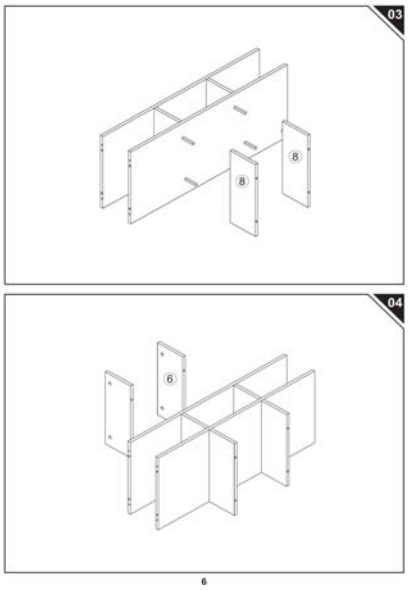	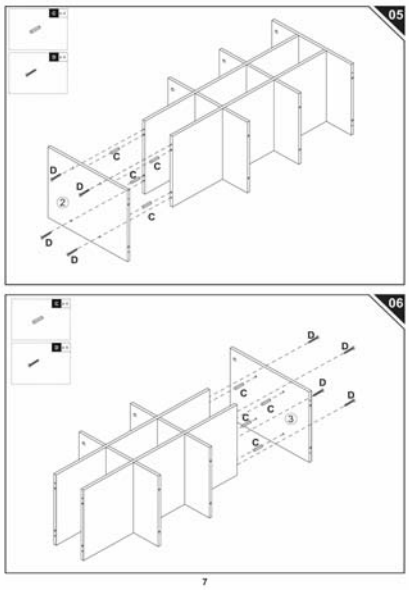

Received instruction（view 9）	Received instruction（view 10）
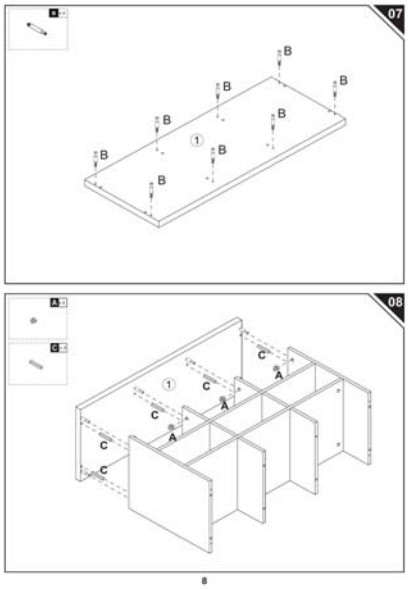	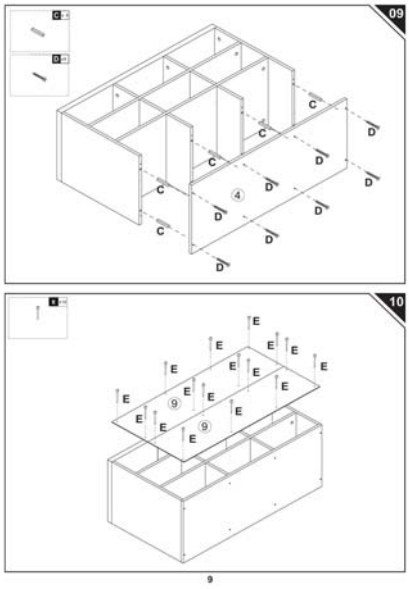
Received instruction（view 11）	Received instruction（view 12）
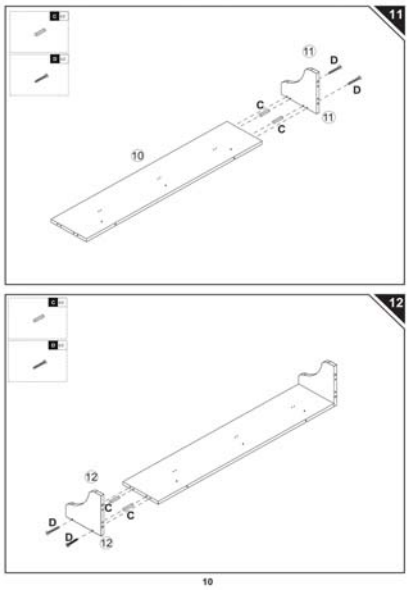	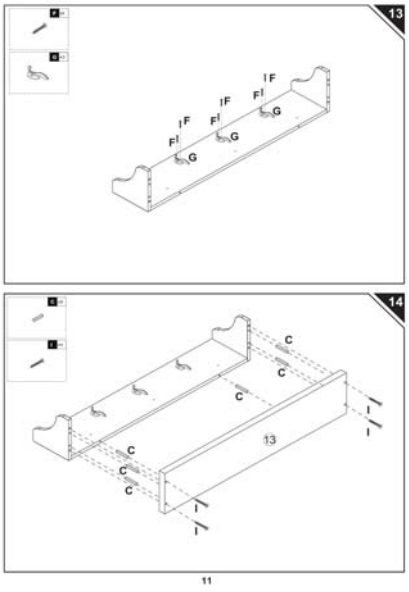

Received instruction（view 13）	Received instruction（view 14）
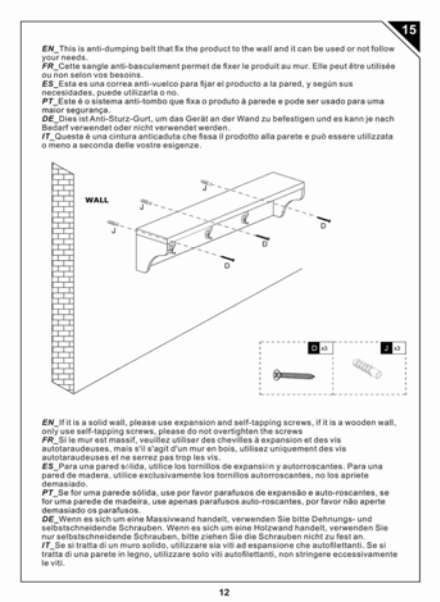	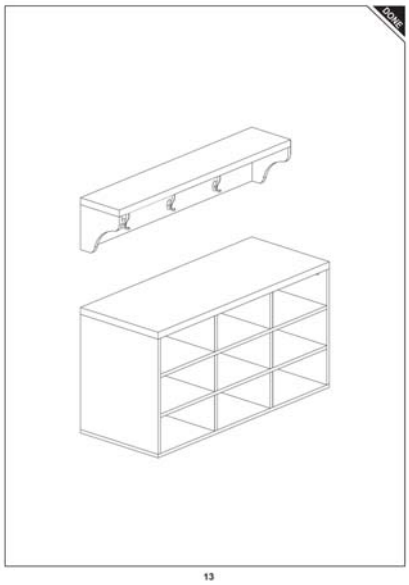
Received instruction（view 15）	**Received instruction（view 16）**
	Blank

Sample Photo:

********END OF REPORT********