中国认可
国际互认
检测
TESTING
CNAS L11937

TEST REPORT

REPORT NO : UPN202311089A

APPLICANT : Pan leisure Technology Corporation

SAMPLE DESCRIPTION : Rocking Chair

Zhejiang U-Products Certificate & Testing Co., Ltd.

检验检测专用章
(1)

TEST REPORT

Report # : UPN202311089A

Issued on : 2023-11-28

Applicant Information		Sample Photo:
Company:	Pan leisure Technology Corporation	
Address:	Baoshan Village, Xiaozhi Town, Linhai City, Taizhou City, Zhejiang Province	
Contact:	/	
Tel:	/	
E-mail:	/	
Fax:	/	

Sample Information			
Sample Description:	Rocking Chair	**Purchase Order:**	/
Item/ Style Number:	867-048	**No. of Sample Submitted:**	1
Country of Origin:	China	**Country of Destination:**	/

Tests Start:	2023-11-10
Tests End:	2023-11-22
Applied Test Level:	**Domestic**
Investigation(s) Requested:	**EN 581-1:2017 Outdoor furniture. Seating and tables for camping, domestic and contract use – Part 1: General safety requirements** **EN 581-2:2015 + AC:2016 Outdoor furniture - Seating and tables for camping, domestic and contract use - Part 2: Mechanical safety requirements and test methods for seating**

Overall Rating: Pass

***NOTE**: RATING IS BASED ON TESTING LAB RESULTS. FINAL ACCEPTANCE OR REJECTION IS PER CLIENT ONLY.*
For more detail information, please see test results from Page 2.

Prepared by	Reviewed by	Approved by

Building 15, Xingshun Road No. 36, Ningbo zhongyi Ecological Park, Yuyao City, Zhejiang Province.
Tel: +86-574 6255 0791
Fax: +86-574 6255 0795
E-mail: info@upn-cn.com

This report is intended for your exclusive use. Any copy of the report to or for any other person or entity, or use of our name or trademark is permitted with our written permission. Our report is limited to the test sample identified herein. the results set forth in this report are not necessarily indicative or representative of the statistical quality or characteristcs of the lot from which a test sample was taken or any similar or identical product.

TEST REPORT

Report # : UPN202311089A

Issued on : 2023-11-28

Sample Information :					
The tests have been performed the following conditions:				20 ± 5 °C	
Sample Defects Before Test:				No Visible Defects	
Overall Dimension	Rocking Chair	Depth:	1,022mm;	Height:	870 mm;
		Width:	683 mm;	Weight:	10.8kg;

********** End of Page **********

Building 15, Xingshun Road No. 36, Ningbo zhongyi Ecological Park, Yuyao City, Zhejiang Province.
Tel: +86-574 6255 0791
Fax: +86-574 6255 0795
E-mail: info@upn-cn.com

This report is intended for your exclusive use. Any copy of the report to or for any other person or entity, or use of our name or trademark is permitted with our written permission. Our report is limited to the test sample identified herein. the results set forth in this report are not necessarily indicative or representative of the statistical quality or characteristcs of the lot from which a test sample was taken or any similar or identical product.

Test Result:

1. **EN 581-1:2017 Outdoor furniture. Seating and tables for camping, domestic and contract use. General safety requirements**

EN 581-1:2017			
CLAUSE	**REQUIREMENT**	**Result**	**REMARKS (nominal and actual values)**
5.1	General	P	/
5.2	Tubular components	P	/
5.3.1	Shear and squeeze points when erecting, adjusting and folding away	P	/
5.3.2	Shear and squeeze points under the influence of powered mechanisms	N/A	/
5.3.3	Shear and squeeze points during use	P	/

Note:
P: Pass
F: Fail
N/A: Not Applicable
N/R: Not Required

********** **End of Page** **********

Building 15, Xingshun Road No. 36, Ningbo zhongyi Ecological Park, Yuyao City, Zhejiang Province.
Tel: +86-574 6255 0791
Fax: +86-574 6255 0795
E-mail: info@upn-cn.com

This report is intended for your exclusive use. Any copy of the report to or for any other person or entity, or use of our name or trademark is permitted with our written permission. Our report is limited to the test sample identified herein. the results set forth in this report are not necessarily indicative or representative of the statistical quality or characteristcs of the lot from which a test sample was taken or any similar or identical product.

2 **EN 581-2:2015 + AC:2016 Outdoor furniture - Seating and tables for camping, domestic and contract use - Part 2: Mechanical safety requirements and test methods for seating (Reference test methods- EN 1728:2012/ EN 1022:2005)**

Lounge：EN 581-2:2015 + AC:2016			
CLAUSE	**REQUIREMENT**	**Result**	**REMARKS (nominal and actual values)**
EN 1728:2012 clause 8.2	Seat and back static load test	P	Seat Force:1100N Cycles: 10
EN 1728:2012 clause 8.3	Additional seat and leg rest static load test	P	Seat Load:750N
EN 1728:2012 clause 8.4.1	Seat and back durability test	P	Seat Force:750N Back Force:250N Cycles:12,500
EN 1728:2012 clause 8.4.2	Additional seat durability test	P	Force:750N Cycles:5,000
EN 1728:2012 clause 8.5	Durability test on back rest mechanism	P	Seat Load:1000N Force:190N Cycles:5,000
EN 1728:2012 clause 8.6	Arm rest static load test	P	Force: 700 N Cycles:10
EN 1728:2012 clause 8.7	Arm rest durability test	P	Force:400N Cycles:10,000
EN 1728:2012 clause 8.8	Impact test	P	Drop height: 140mm Cycles:10
EN 1728:2012 clause 8.9	Lifting test for mobile loungers	N/A	/
EN 1022:2005 6.2	Forward stability	N/A	/
EN 1022:2005 6.6	Rearward stability	N/A	/
EN 1022:2005 6.5	Sideways stability	N/A	/
Annex A. A.1.2	Forward stability	P	No overturning was found during the test.
EN 1022:2005 6.6＆7.5	Rearward stability	P	No overturning was found during the test.
Annex A. A.1.1	Sideways stability	P	No overturning was found during the test.
8	Information for use	P	/

Note:
P: Pass
F: Fail
N/A: Not Applicable
N/R: Not Required

Building 15, Xingshun Road No. 36, Ningbo zhongyi Ecological Park, Yuyao City, Zhejiang Province.
Tel: +86-574 6255 0791
Fax: +86-574 6255 0795
E-mail: info@upn-cn.com

This report is intended for your exclusive use. Any copy of the report to or for any other person or entity, or use of our name or trademark is permitted with our written permission. Our report is limited to the test sample identified herein. the results set forth in this report are not necessarily indicative or representative of the statistical quality or characteristcs of the lot from which a test sample was taken or any similar or identical product.

8 Information for use	P	/
8.1 General Instruction for use shall be provided in the language(s) of the country where the seating are sold. These instructions shall be headed "IMPORTANT, RETAIN FOR FUTURE REFERENCE: READ CAREFULLY" in letters no less than 5 mm high, unless if the following information are permanently marked on the product. It shall contain at least the following details:	P	/
a) name and address of the manufacturer/supplier/retailer;	P	/
b) conditions for use of the product (domestic, camping or contract).	P	/
If applicable:	P	/
c) assembly instructions;	P	/
d) instructions for the care and maintenance of the seating;	P	/
e) if the seating is fitted with seat height adjustments with energy accumulators, an additional note is required pointing out that only trained personnel may replace or repair seat height adjustments components with energy accumulators	NA	/

Note: -NIL-

Legend:

P = PASS, the sample MEETS the standard requirement.
F = FAIL, the sample DOES NOT MEET the standard requirement.
NA = NON APPLICABILE, the requirement/test IS NOT APPLICABLE to the sample.
NR = NOT REQUESTED, On Customer request the test is NOT PERFORMED.
NP = General note (see details).
ND = NOT DECLARED.
// = The rating of test CANNOT BE EXPRESSED, see details in test report

********** **End of Page** **********

This report is intended for your exclusive use. Any copy of the report to or for any other person or entity, or use of our name or trademark is permitted with our written permission. Our report is limited to the test sample identified herein. the results set forth in this report are not necessarily indicative or representative of the statistical quality or characteristcs of the lot from which a test sample was taken or any similar or identical product.

Sample Photo:

Front View	Side 45° View
Side View	Back View

********** **End of Page** **********

Building 15, Xingshun Road No. 36, Ningbo zhongyi Ecological Park, Yuyao City, Zhejiang Province.
Tel: +86-574 6255 0791
Fax: +86-574 6255 0795
E-mail: info@upn-cn.com

This report is intended for your exclusive use. Any copy of the report to or for any other person or entity, or use of our name or trademark is permitted with our written permission. Our report is limited to the test sample identified herein. the results set forth in this report are not necessarily indicative or representative of the statistical quality or characteristcs of the lot from which a test sample was taken or any similar or identical product.

Received instruction:

Received instruction（view 1）

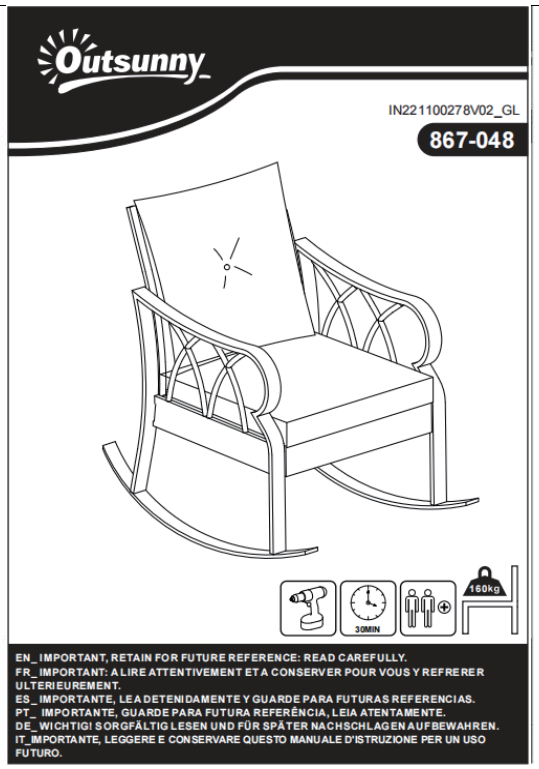

Received instruction（view 2）

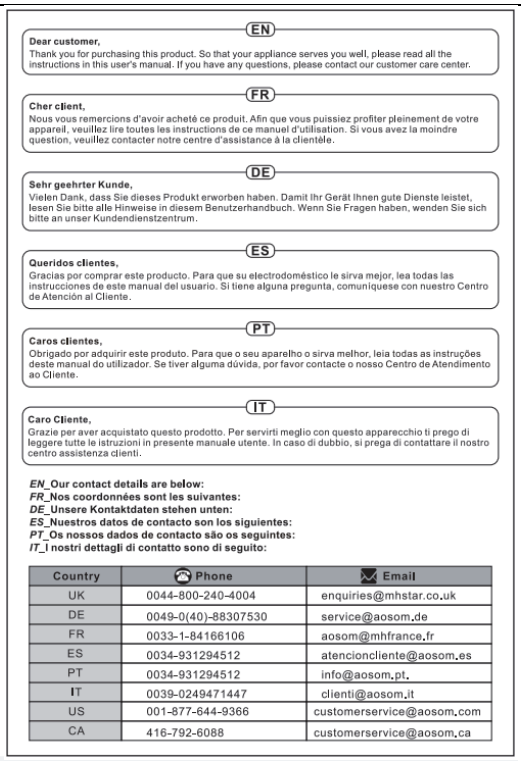

EN

Dear customer,
Thank you for purchasing this product. So that your appliance serves you well, please read all the instructions in this user's manual. If you have any questions, please contact our customer care center.

FR

Cher client,
Nous vous remercions d'avoir acheté ce produit. Afin que vous puissiez profiter pleinement de votre appareil, veuillez lire toutes les instructions de ce manuel d'utilisation. Si vous avez la moindre question, veuillez contacter notre centre d'assistance à la clientèle.

DE

Sehr geehrter Kunde,
Vielen Dank, dass Sie dieses Produkt erworben haben. Damit Ihr Gerät Ihnen gute Dienste leistet, lesen Sie bitte alle Hinweise in diesem Benutzerhandbuch. Wenn Sie Fragen haben, wenden Sie sich bitte an unser Kundendienstzentrum.

ES

Queridos clientes,
Gracias por comprar este producto. Para que su electrodoméstico le sirva mejor, lea todas las instrucciones de este manual del usuario. Si tiene alguna pregunta, comuníquese con nuestro Centro de Atención al Cliente.

PT

Caros clientes,
Obrigado por adquirir este produto. Para que o seu aparelho o sirva melhor, leia todas as instruções deste manual do utilizador. Se tiver alguma dúvida, por favor contacte o nosso Centro de Atendimento ao Cliente.

IT

Caro Cliente,
Grazie per aver acquistato questo prodotto. Per servirti meglio con questo apparecchio ti prego di leggere tutte le istruzioni in presente manuale utente. In caso di dubbio, si prega di contattare il nostro centro assistenza clienti.

***EN_*Our contact details are below:**
***FR_*Nos coordonnées sont les suivantes:**
***DE_*Unsere Kontaktdaten stehen unten:**
***ES_*Nuestros datos de contacto son los siguientes:**
***PT_*Os nossos dados de contacto são os seguintes:**
***IT_*I nostri dettagli di contatto sono di seguito:**

Country	Phone	Email
UK	0044-800-240-4004	enquiries@mhstar.co.uk
DE	0049-0(40)-88307530	service@aosom.de
FR	0033-1-84166106	aosom@mhfrance.fr
ES	0034-931294512	atencioncliente@aosom.es
PT	0034-931294512	info@aosom.pt.
IT	0039-0249471447	clienti@aosom.it
US	001-877-644-9366	customerservice@aosom.com
CA	416-792-6088	customerservice@aosom.ca

Received instruction（view 3）

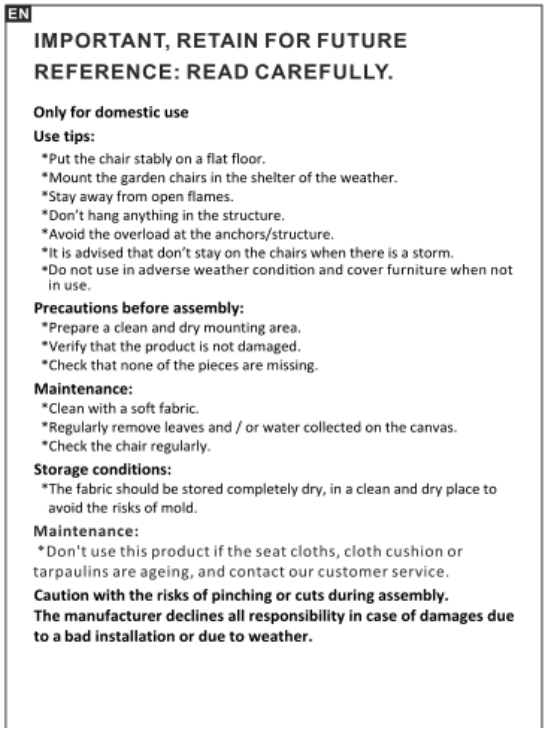

EN

IMPORTANT, RETAIN FOR FUTURE REFERENCE: READ CAREFULLY.

Only for domestic use

Use tips:
*Put the chair stably on a flat floor.
*Mount the garden chairs in the shelter of the weather.
*Stay away from open flames.
*Don't hang anything in the structure.
*Avoid the overload at the anchors/structure.
*It is advised that don't stay on the chairs when there is a storm.
*Do not use in adverse weather condition and cover furniture when not in use.

Precautions before assembly:
*Prepare a clean and dry mounting area.
*Verify that the product is not damaged.
*Check that none of the pieces are missing.

Maintenance:
*Clean with a soft fabric.
*Regularly remove leaves and / or water collected on the canvas.
*Check the chair regularly.

Storage conditions:
*The fabric should be stored completely dry, in a clean and dry place to avoid the risks of mold.

Maintenance:
*Don't use this product if the seat cloths, cloth cushion or tarpaulins are ageing, and contact our customer service.

Caution with the risks of pinching or cuts during assembly.
The manufacturer declines all responsibility in case of damages due to a bad installation or due to weather.

Received instruction（view 4）

FR

IMPORTANT:A LIRE ATTENTIVEMENT ET À CONSERVER POUR CONSULTATION ULTÉRIEURE.

Seulement pour usage domestique

Conseils:
* Pour une performance optimale, veuillez le poser sur une surface plane.
* Installer la chaise sous l'auvent.
* Maintenez à l'écart de toute flamme nue.
* Évitez de suspendre des matériaux sur le meuble.
* Veuillez à ne pas dépasser les capacités de poids maximales.
* Il est conseille de ne pas rester sur la chaise en cas d'orage.
* Ne pas utiliser dans des conditions météorologiques défavorables et couvrir les meubles lorsqu'ils ne sont pas utilisés.

Précautions avant l'assemblage:
* Préparez une zone de montage propre et sèche.
* Vérifiez que le produit n'est pas endommagé.
* Vérifiez qu'aucun des morceaux ne manque.

Recommandations d'entretien:
*Veuillez utiliser un chiffon doux pour essuyer la chaise.
*Veuillez nettoyer régulièrement l'eau stagnante du fauteuil
*Veuillez vérifier régulièrement la chaise pour éviter une structure lâche.

Conditions de stockage:
•Lorsqu'ils ne sont pas utilisés, les meubles doivent être recouverts d'une housse appropriée.

Entretien:
*Si vous remarquez une détérioration du tissu du siège, du coussin en tissu ou de la bâche, ne l'utilisez pas, contactez notre service clientèle immédiatement.

Veuillez faire attention à ne pas vous blesser lors de l'assemblage du produit.
Le fabricant n'est pas responsable des dommages causés par une mauvaise installation.

This report is intended for your exclusive use. Any copy of the report to or for any other person or entity, or use of our name or trademark is permitted with our written permission. Our report is limited to the test sample identified herein. the results set forth in this report are not necessarily indicative or representative of the statistical quality or characteristcs of the lot from which a test sample was taken or any similar or identical product.

Received instruction（view 5）	Received instruction（view 6）
ES **IMPORTANTE, LEA Y GUARDE PARA FUTURAS REFERENCIAS.** **Solamente para uso doméstico** **Consejos de uso:** *Coloque el balancín de forma estable sobre un suelo plano. *Monte las sillas de jardín en el toldo. *Manténgase alejado de llamas abiertas. *No cuelgue nada en la estructura. *Evite la sobrecarga en los anclajes. *Se aconseja no permanecer en el balancín cuando hay tormenta. *Se recomienda resguardar en caso de viento o lluvia fuerte y en su ausencia. **Precauciones antes del montaje:** *Prepare una zona de montaje limpia y seca. *Verificar que el producto no este dañado. *Controlar que no falta ninguna de las piezas. **Mantenimiento:** *Limpiar con la ayuda de un paño suave. *Eliminar regularmente las hojas y/o agua recogidas sobre la lona. *Inspeccione las sillas regularmente. **Condiciones de almacenaje:** *La tela debe ser guardada totalmente seca, en un lugar limpio y seco para evitar los riesgos de moho. **Mantenimiento:** *No utilice este producto si la tela del asiento, el cojín de tela o la lona alquitranada están envejeciendo, comuníquese con nuestro servicio de atención al cliente a tiempo. **Precaución con los riesgos de pinzamientos o cortes durante el montaje. El fabricante declina toda responsabilidad en caso de deteriores debidos a una mala instalación o por causas meteorológicas.**	PT **IMPORTANTE, RETER PARA REFERÊNCIA FUTURA: LEIA ATENTAMENTE.** **Produto para uso em doméstico** **Conselhos de uso:** * Coloque o produto sobre um solo plano e estável. * Monte as cadeiras sobre um toldo. * Mantenha-o afastado de fontes de calor e chamas. * Evite a sobre carga das fixações do produto. * Guarde em caso de vento ou chuva forte. **Precauções antes da montagem:** * Prepare a zona de montagem. Certifique-se de que esteja limpa e seca. * Certifique-se que o produto esteja em bom estado. * Verifique que não falte nenhuma das peças. **Manutenção:** * Limpar o produto com a ajuda de um pano suave. * Inspecionar o produto de forma regular a fim de detectar possíveis defeitos que possa afetar seu uso. **Condições de armazenamento:** * A fim de evitar a aparecimento de mofo, os tecidos se devem guardar totalmente secos e em um lugar limpo e sem umidade. **Manutenção:** *Não utilize este produto se os panos de assento, almofadas de pano ou lonas estiverem a envelhecer, e contacte o nosso serviço ao cliente. **Atenção:** **Risco de cortes durante a montagem. O fabricante declina toda responsabilidade no caso de deterioração devido uma má instalação ou por causas meteorológicas.** **Se o produto estiver equipado com algum mecanismo elétrico de ajuste de altura ou similar, somente poderá ser substituído ou reparado por uma pessoa qualificada ou técnicos.**
Received instruction（view 7）	**Received instruction（view 8）**
DE **WICHTIG! SORGFÄLTIG LESEN UND FÜR SPÄTER NACHSCHLAGEN AUFBEWAHREN.** **Nur für den häuslichen Gebrauch bestimmt** **Nutzungshinweise:** * Optimale Leistung bitte auf eine ebene Fläche stellen. * Installieren Sie den Stuhl unter der Markise. * Von offenen Flammen fernhalten. * Vermeiden Sie jegliche hängenden Materialien an den Möbeln. * Bitte überschreiten Sie nicht die maximalen Gewichtskapazitäten. * Es wird empfohlen, die Schaukel bei schlechten Wetterbedingungen nicht zu benutzen. * Verwendung nicht bei schlechtem Wetter und decken Sie die Möbel ab, wenn sie nicht in Verwendung sind. **Vorsichtsmaßnahmen vor der Montage:** * Bitte bereiten Sie einen sauberen und trockenen Montagebereich vor. * Stellen Sie sicher, dass das Produkt nicht beschädigt ist. * Vergewissern Sie sich, dass keines der Zubehörteile fehlt. **Instandhaltung:** * Bitte reinigen Sie die Schaukel nur mit einem weichen Tuch. * Bitte entfernen Sie regelmäßig alle Blätter und / oder Wasser, die sich auf dem Stoff angesammelt haben. *Überprüfen Sie die Gartenstühle regelmässig. **Lagerung:** *Bei Nichtverwendung sollten die Möbel mit einer geeigneten Möbelabdeckung abgedeckt werden. **Wartung:** *Verwenden Sie dieses Produkt nicht, wenn die Sitztücher, das Stoffkissen oder die Planen gealtert sind, und wenden Sie sich an unseren Kundendienst. **Vorsicht vor Quetsch- und Schnittgefahr bei der Montage.** **Der Hersteller lehnt jede Haftung für Schäden ab, die durch unsachgemäße Installation oder Witterun seinflüsse verursacht wurden.**	IT **IMPORTANTE! CONSERVARE IL PRESENTE MANUALE PER FUTURO RIFERIMENTO E LEGGERLO ATTENTAMENTE.** **Solo per uso domestico** **Consigli per l'uso:** *Per le prestazioni ottimali, si prega di posizionarli sulla superficie piana. *Installare la sedia sotto la tenda da sole. *Tenere lontano da qualsiasi fiamme libere. *Evitare di appendere qualsiasi materiale sui mobili. *Non superare le capacità massime di peso. *E' consigliabile di non utilizzare l'altalena quando fuori c'e' un temporale. *Non utilizzare nel maltempo e si prega di coprire i mobili quando non sono in uso. **Precauzioni prima del montaggio:** *Preparare un'area di assemblaggio pulita e asciutta. *Verificare che il prodotto non sia danneggiato. *Controllare che nessun pezzo manchi. **Manutenzione:** *Pulire con un panno morbido. *Rimuovere regolarmente foglie e / o acqua depositata sul telo. *Controllare le sedie regolarmente. **Condizioni per il deposito:** *Il tessuto va riposto completamente asciutto in un luogo asciutto e pulito per evitare i rischi di muffa. **Manutenzione:** *Non utilizzare questo prodotto in caso che i tessuti del sedile, il cuscino in tessuto o i teloni si stanno invecchiando e contatta in tempo il nostro servizio clienti. **Cautela causa rischio di tagli o pizzicamenti durante l'assemblaggio.** **Il produttore declina ogni responsabilita' in caso di lesioni derivanti da montaggio inaccurato o dalle condizioni metereologiche.**

This report is intended for your exclusive use. Any copy of the report to or for any other person or entity, or use of our name or trademark is permitted with our written permission. Our report is limited to the test sample identified herein. the results set forth in this report are not necessarily indicative or representative of the statistical quality or characteristcs of the lot from which a test sample was taken or any similar or identical product.

Received instruction（view 9）	Received instruction（view 10）
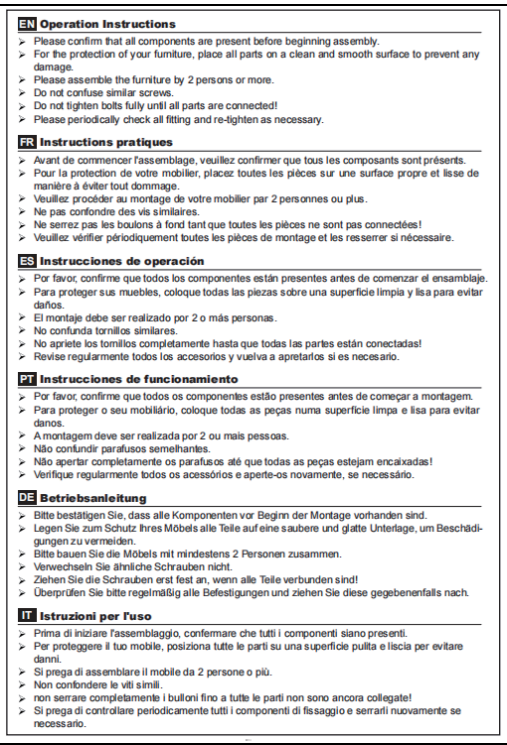	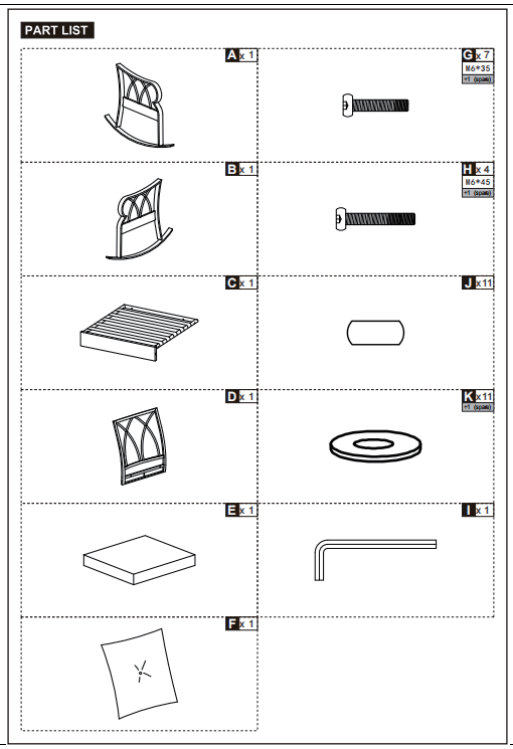
Received instruction（view 11）	Received instruction（view 12）
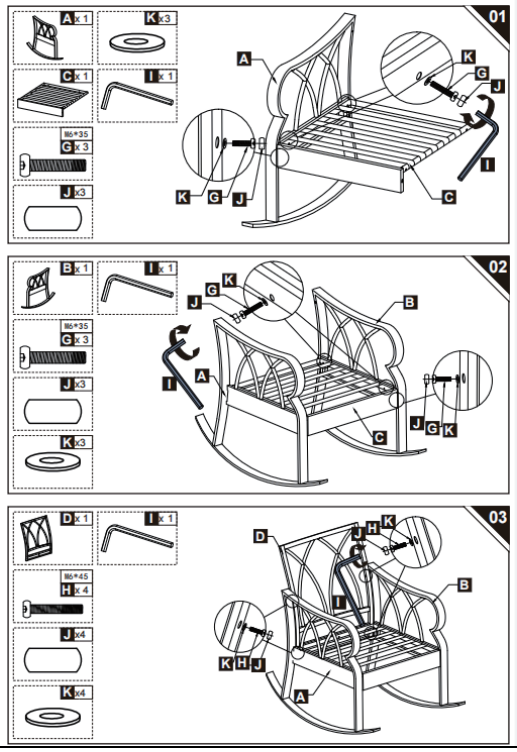	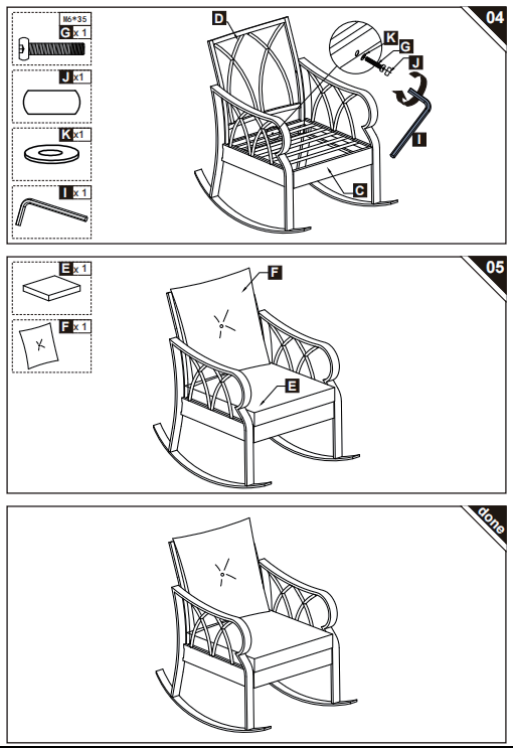

EN Operation Instructions

- Please confirm that all components are present before beginning assembly.
- For the protection of your furniture, place all parts on a clean and smooth surface to prevent any damage.
- Please assemble the furniture by 2 persons or more.
- Do not confuse similar screws.
- Do not tighten bolts fully until all parts are connected!
- Please periodically check all fitting and re-tighten as necessary.

FR Instructions pratiques

- Avant de commencer l'assemblage, veuillez confirmer que tous les composants sont présents.
- Pour la protection de votre mobilier, placez toutes les pièces sur une surface propre et lisse de manière à éviter tout dommage.
- Veuillez procéder au montage de votre mobilier par 2 personnes ou plus.
- Ne pas confondre des vis similaires.
- Ne serrez pas les boulons à fond tant que toutes les pièces ne sont pas connectées!
- Veuillez vérifier périodiquement toutes les pièces de montage et les resserrer si nécessaire.

ES Instrucciones de operación

- Por favor, confirme que todos los componentes están presentes antes de comenzar el ensamblaje.
- Para proteger sus muebles, coloque todas las piezas sobre una superficie limpia y lisa para evitar daños.
- El montaje debe ser realizado por 2 o más personas.
- No confunda tornillos similares.
- No apriete los tornillos completamente hasta que todas las partes están conectadas!
- Revise regularmente todos los accesorios y vuelva a apretarlos si es necesario.

PT Instrucciones de funcionamiento

- Por favor, confirme que todos os componentes estão presentes antes de começar a montagem.
- Para proteger o seu mobiliário, coloque todas as peças numa superfície limpa e lisa para evitar danos.
- A montagem deve ser realizada por 2 ou mais pessoas.
- Não confundir parafusos semelhantes.
- Não apertar completamente os parafusos até que todas as peças estejam encaixadas!
- Verifique regularmente todos os acessórios e aperte-os novamente, se necessário.

DE Betriebsanleitung

- Bitte bestätigen Sie, dass alle Komponenten vor Beginn der Montage vorhanden sind.
- Legen Sie zum Schutz Ihres Möbels alle Teile auf eine saubere und glatte Unterlage, um Beschädigungen zu vermeiden.
- Bitte bauen Sie die Möbels mit mindestens 2 Personen zusammen.
- Verwechseln Sie ähnliche Schrauben nicht.
- Ziehen Sie die Schrauben erst fest an, wenn alle Teile verbunden sind!
- Überprüfen Sie bitte regelmäßig alle Befestigungen und ziehen Sie diese gegebenenfalls nach.

IT Istruzioni per l'uso

- Prima di iniziare l'assemblaggio, confermare che tutti i componenti siano presenti.
- Per proteggere il tuo mobile, posiziona tutte le parti su una superficie pulita e liscia per evitare danni.
- Si prega di assemblare il mobile da 2 persone o più.
- Non confondere le viti simili.
- non serrare completamente i bulloni fino a tutte le parti non sono ancora collegate!
- Si prega di controllare periodicamente tutti i componenti di fissaggio e serrarli nuovamente se necessario.

Building 15, Xingshun Road No. 36, Ningbo zhongyi Ecological Park, Yuyao City, Zhejiang Province.
Tel: +86-574 6255 0791
Fax: +86-574 6255 0795
E-mail: info@upn-cn.com

This report is intended for your exclusive use. Any copy of the report to or for any other person or entity, or use of our name or trademark is permitted with our written permission. Our report is limited to the test sample identified herein. the results set forth in this report are not necessarily indicative or representative of the statistical quality or characteristcs of the lot from which a test sample was taken or any similar or identical product.

Received instruction（view 13）

US_ IMPORTER:

Imported by Aosom LLC
27150 SW Kinsman Rd Wilsonville, OR 97070 USA
MADE IN CHINA

CA_ IMPORTER / IMPORTÉ PAR:

Imported by Aosom Canada Inc.
7270 Woodbine Avenue, Unit 307, Markham, Ontario Canada L3R 4B9
MADE IN CHINA

Importé par Aosom Canada Inc.
7270 Woodbine Avenue, unité 307, Markham, Ontario Canada L3R 4B9
Fabriqué en Chine

UK_ IMPORTER:

MH STAR UK LTD
Unit 27, Perivale Park, Horsenden lane South
Perivale, UB6 7RH
MADE IN CHINA

DE_ IMPORTATEUR:

MH Handel GmbH
Wendenstraße 309
D-20537 Hamburg
Germany
IN CHINA HERGESTELLT

FR_ IMPORTÉ PAR:

MH France
2, rue Maurice Hartmann
92130 Issy-les-Moulineaux
France
Fabriqué en Chine

FR Pensez à donner ou recycler. Association ou Magasin ou Déchèterie
https://quefairedemesdechets.fr

IT_ IMPORTATO:

AOSOM Italy srl
Centro Direzionale Milanofiori
Strada 1 Palazzo F1
20057 Assago (MI)
P.I.: 08567220960
FATTO IN CINA

ES/PT_ IMPORTADOR:

SPANISH AOSOM, S.L.
C/ ROC GROS, Nº 15. 08550, ELS HOSTALETS DE BALENYÀ, SPAIN.
B66295775
WWW.AOSOM.ES
ATENCIONCLIENTE@AOSOM.ES
TEL: 931294512
HECHO EN CHINA

SPANISH AOSOM, S.L
C.ROC GROS N.15, 08550. ELS HOSTALETS DE BALENYÀ
TEL: 931294512 (SEG-SEX DAS 7:30H ÀS 16:30H)
INFO@AOSOM.PT
WWW.AOSOM.PT

*****END OF REPORT*****

This report is intended for your exclusive use. Any copy of the report to or for any other person or entity, or use of our name or trademark is permitted with our written permission. Our report is limited to the test sample identified herein. the results set forth in this report are not necessarily indicative or representative of the statistical quality or characteristcs of the lot from which a test sample was taken or any similar or identical product.